TSCI-150PR-SWG-R-WW-1A

True Scientific – 134 Liters (4.72 Cu Ft) Capacity • Pharmacy Unit • Refrigerator – Swing Glass Door – Right Door Hinge – White Exterior • White Interior – 115 Voltage • Revision A

Project Name	Location	Item #	Quantity	Model #	AIA #	SIS #



FEATURES

- Expertly designed air circulation and refrigeration systems ensure temperature stability and uniformity throughout the cabinet, meeting CDC guidelines and eliminating hot and cold spots that could put your contents at risk.
- True Scientific products use R290, a natural refrigerant that is future-proof and sets sustainability standards while providing increased efficiency and reduced operating cost.
- Reliability you can count on with best-in-class warranty – 3 year labor, 5 year parts, 7 year compressor warranty
- Self-Cleaning condenser technology reduces the need for cleaning the condensing coil, reduces energy consumption, and helps maintain the tightest temperatures.
- Battery backed-up digital display of current temperature with alarms for high/low temp, power failure, sensor failure and door ajar.
- Adjustable perforated and non-peal white coated steel shelves, ideal for storing large containers as well as vials and tubes.
- Simulated Temperature Monitoring measured in a glycol-filled bottle to simulate actual product temperature.
- All models have a temperature probe port in the rear of the unit.

PERFORMANCE SPECIFICATIONS

Internal Volume (cu. ft.) (liters)	4.72	134
Temperature Range (min - max)	2°C	8°C
Temperature Set Point	5°C	
Temperature Uniformity	0.9°C	
Temperature Stability	0.9°C	
Energy Star Certified	Yes	
NSF 456 Certified	Yes[1]	
Energy Usage (kWh)	1.03	
Rejected Heat (BTU/hr)	358	

DIMENSIONS & CONSTRUCTION

External Dimensions W x D† x H (in.) (mm)	24 ⅛ x 25 x 31 ⅝ (613 x 635 x 803)	
Number of Doors	1	
Door Type / Swing or Slide	Glass	Swing
Number of Shelves / Type of Shelves	4	2 full 1 half 1 floor rack
Shelf Dimensions (W x D in.) / Shelf Capacity (lbs.)	**Full Shelf**	
	20 x 12 ⅞	53
	Half Shelf	
	20 x 8 ¹⁵⁄₁₆	26
	Floor Rack	
	20 x 8 ⅞	26
Probe Port(s) / Diameter (in.)	1	0.625
Access Port(s) / Diameter (in.)	0	n/a
Internal Outlet	No	
Castors or Leveling Feet	4 stationary castors, 2 front leg leveling feet	
Crated Weight (lbs) (kg)	190	86
Refrigerant	R290	

ELECTRICAL DATA

Voltage / Frequency	120V	60Hz
Amperage	1.36A	
Plug Type	NEMA 5-15P	

Specifications subject to change without notice. Chart dimensions rounded up to the nearest ⅛" (millimeters rounded up to next whole number).

[1] Meets NSF 456 performance standards; calibrated probe currently not offered.

† Depth does not include 1⅜" (35 mm) for door handle or 1" (25 mm) for rear system mechanical components.

APPROVALS	AVAILABLE AT

TSCI-150PR-SWG-R-WW-1A

True Scientific – 134 Liters (4.72 Cu Ft) Capacity • Pharmacy Unit • Refrigerator – Swing Glass Door – Right Door Hinge – White Exterior • White Interior – 115 Voltage • Revision A

STANDARD FEATURES

Refrigeration System

- Refrigeration system specifically designed to maintain cabinet temperatures between 2°C - 8°C (36°F - 46°F).
- Expertly designed airflow system controls temperature uniformity throughout the cabinet within +/- 1°C.
- Self-contained, capillary tube system using environmentally friendly R290 hydrocarbon refrigerant that has zero (0) ozone depletion potential (ODP), & 0.02 global warming potential (GWP).
- Reciprocating hermetic compressor paired with forced air copper tube, aluminum fin condenser.
- Automatic defrost.
- State-of-the-art, electronically communicated evaporator and condensing fan motors. Produces less heat, reduces energy consumption, and provides more efficient airflow.
- Operating conditions: Maximum relative humidity 60% for temperatures from 15°C - 32°C (59°F - 90°F).
- Indoor use only.
- CDC compliant.

Cabinet Construction

- **Exterior** - non-peel or chip white powder coated cold rolled steel; durable and permanent. Corrosion resistant GalFAN coated steel back..
- **Interior** - attractive, white aluminum interior liner with a stainless steel floor.
- **Insulation** - entire cabinet structure is foamed-in-place using a high density polyurethane insulation that has zero ozone depletion potential (ODP) and zero global warming potential (GWP).
- 0.625 Inch diameter probe access port in the back of the unit.
- LED interior lighting, provides more even lighting throughout the cabinet.
- Remote alarm contacts.

Shelving

- Powder-coated, perforated sheet metal shelves adjustable in 1/2 inch (13 mm) increments. 4 shelves total.
- Four (4) stainless steel shelf clips are included per shelf.

Door

- Low-E double pane thermal insulated glass assembly.
- Self closing doors, positive seal, torsion type closure system.
- Door ajar alarm.
- Door fitted with 12" (305mm) long extruded handle. Advanced technology with built-in antimicrobial properties protecting the handle.
- Door lock included.
- Magnetic door gaskets of one piece construction, removable without tools for ease of cleaning.

Electrical

- Unit completely pre-wired at factory and ready for final connection to a 115/60/1 phase, 15 amp dedicated outlet. Cord and plug set included.

Optional Features/Accessories (upcharge and lead times may apply)

- Stainless steel interior
- Stainless steel exterior
- Left door swing
- Additional perforated sheet metal shelves
- Wire shelves
- 2.5 inch castors

UNIFORMITY & STABILITY

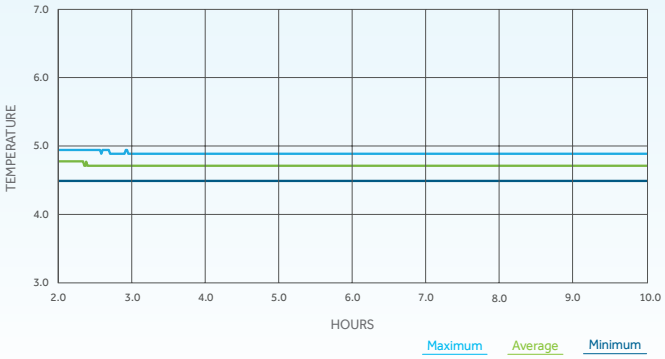

PLAN VIEW

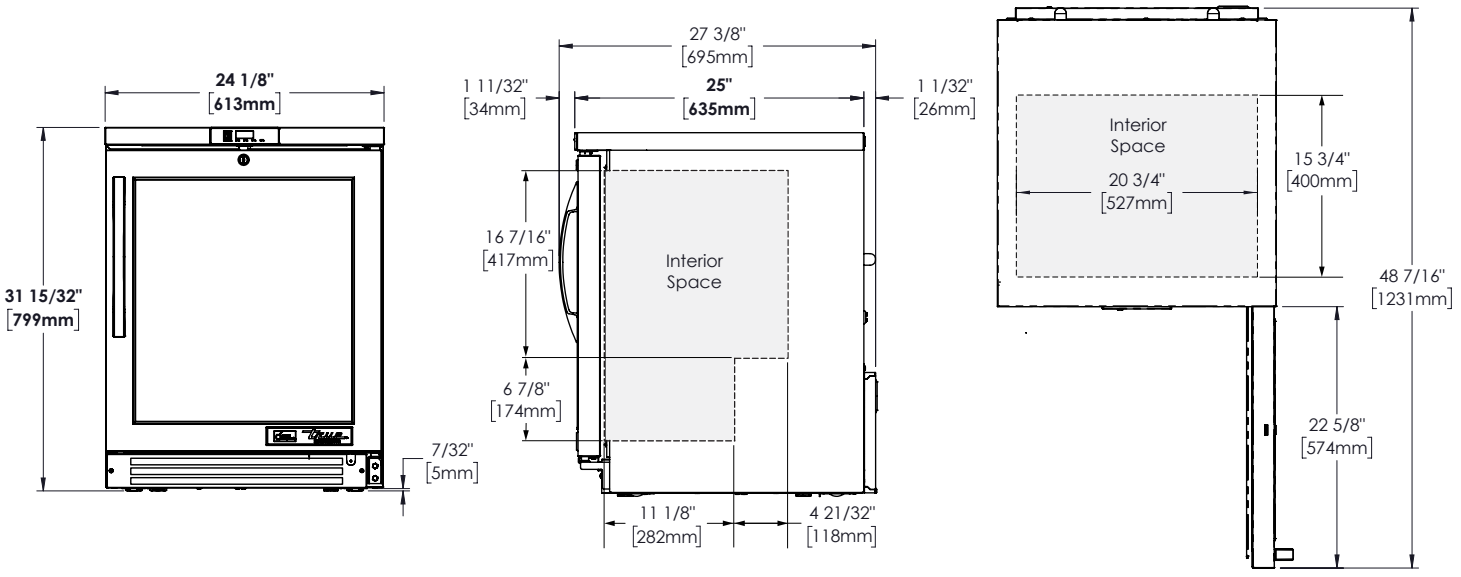

2001 East Terra Lane • O'Fallon, MO 63366-4434 • 636-240-2400 • Toll Free 800-325-6152 • Parts Dept. 800-424-True
truemfg.com